Ship loose items:
*NONE

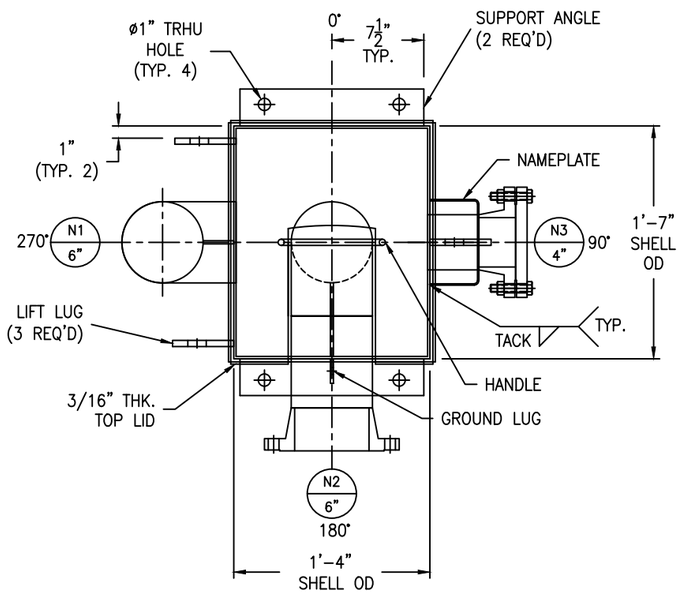

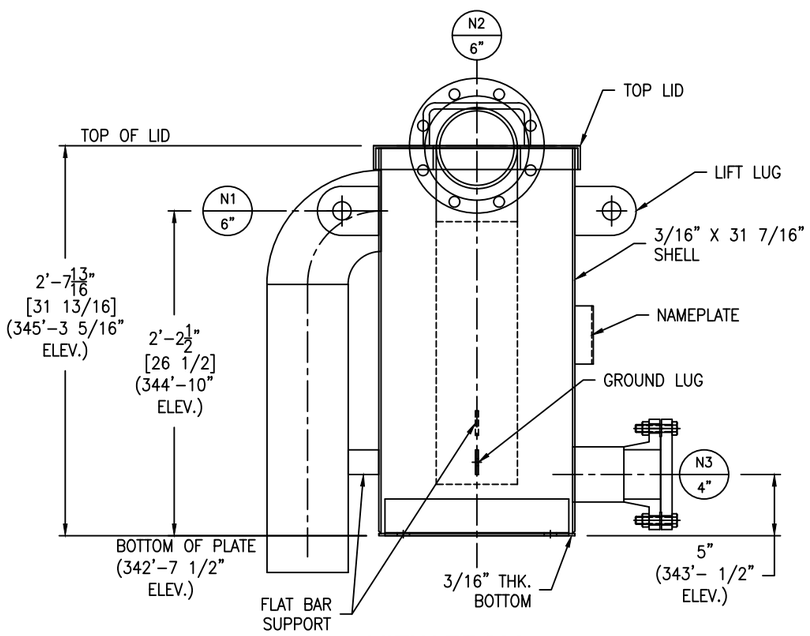

VIEW FROM 180°

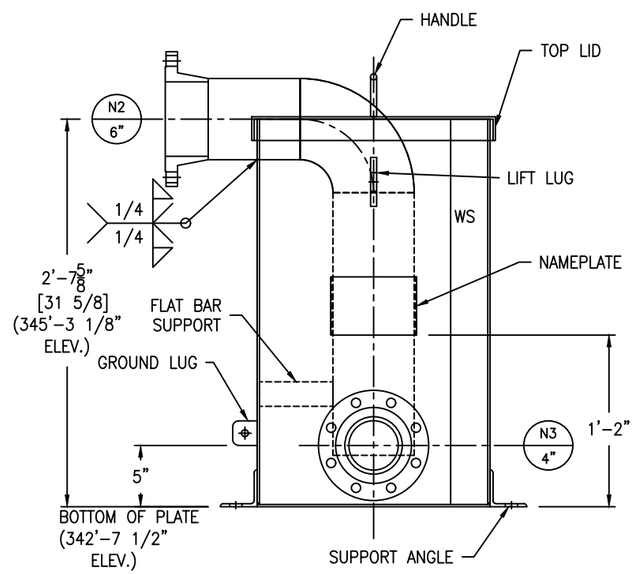

VIEW FROM 90°

△1 ICP DRAWING NO. 010-1060-039

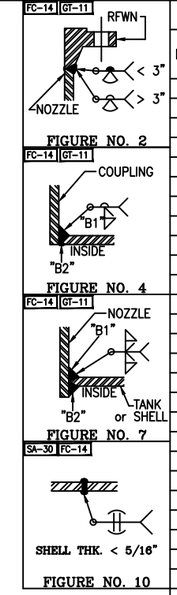

NOZZLE SCHEDULE

MARK	SERVICE	SIZE	RATING	TYPE / STYLE	NECK SCHED.	PROJECTION EXT. (℄)	PROJECTION INT. (MIN.)	WELD FIGURE	REPAD SIZE (WIDTH X THK.)	WELD SIZE "A1"	"A2"	"B1"	"B2"	"C1"	"C2"
N1	OVERFLOW	6"	–	ELBOW W/ PIPE	40	SEE DWG.	–	4	–	–	–	1/4	–	–	–
N2	INLET	6"	150#	RFWN	40	SEE DWG.	SEE DWG.	2,8	–	–	–	1/4	1/4	–	–
N3	CLEAN-OUT	4"	150#	RFWN W/ BLIND	40	7"	–	2,4	–	–	–	3/16	–	–	–

MATERIALS OF CONSTRUCTION

	VESSEL
SHELL	SA240-304/304L
TOP LID	SA240-304-304L
RIM ANGLE	–
NOZZLE NECKS	SA312-304/304L WLD & SA403-304/304L WPW
NOZZLE FLANGES	SA182F-304/304L
MANWAY NECKS	–
MANWAY FLANGES	–
GASKETS	GARLOCK 3000
BOLTS/STUDS	SA193-B7 (PLATED)
NUTS	SA194-2H (PLATED)
REPADS	–
COUPLINGS	–
SUPPORTS/HOLD DOWNS	SA479-304/304L
LIFTING LUGS	SA240-304/304L
VACUUM RINGS	–
INSULATION RINGS	–
GROUND LUG	SA240-304/304L
BAFFLE	–
LADDER	–
TANK CLIPS (LADDER)	–
HANDRAIL	–
HANDRAIL CLIPS	–
PLATFORM	–
PLATFORM CLIPS	–
DIPTUBE SUPPORT	–
JACKET SHELL	–
JACKET HEADS	–
JACKET NOZZLE NECKS	–
JACKET NOZZLE FLANGES	–

DESIGN DATA

	VESSEL
DESIGN AND FAB. CODE	API650
CERT. STAMP REQ'D.	NO
DESIGN PRESSURE	ATM
DESIGN TEMPERATURE	155° F
MIN. DESIGN METAL TEMP.	-20° F @ ATM
OPERATING PRESSURE	ATM
OPERATING TEMPERATURE	MIN. 40° F / MAX. 105° F
JOINT EFFICIENCY HEADS	NONE
JOINT EFFICIENCY SHELL	NONE
CORROSION ALLOWANCE	0"
SPECIFIC GRAVITY	1.0
EARTHQUAKE ZONE	Ss = (0.157) S1 = (0.08)
WIND LOAD	120 MPH
STRESS RELIEF	NOT REQ'D
RADIOGRAPHIC EXAM	NOT REQ'D
DYE PENETRANT EXAM	NOT REQ'D
MAGNETIC PARTICLE EXAM	NOT REQ'D
HYDROSTATIC TEST	FILL WITH WATER
PNEUMATIC TEST	–
JKT HYDRO TEST	–
JKT DESIGN AND FAB. CODE	–
JKT CERT. STAMP REQ'D.	–
JKT DESIGN PRESSURE	–
JKT DESIGN TEMPERATURE	–
JKT MIN. DESIGN METAL TEMP.	–
JKT OPERATING PRESSURE	–
JKT OPERATING TEMPERATURE	–
JKT JOINT EFFICIENCY HEADS	–
JKT JOINT EFFICIENCY SHELL	–

VESSEL FINISH

INTERIOR WELD TREATMENT:	SAV TANK STANDARD
EXTERIOR WELD TREATMENT:	SAV TANK STANDARD
SAV TANK FINISHING STANDARD:	SEE NOTE 6
INSULATION:	N/A
PAINTING:	N/A

VESSEL CAPACITY AND WEIGHTS

OPERATING CAPACITY	–
FULL CAPACITY	40 GAL.
EMPTY SHIPPING WEIGHT	350 LBS.
WEIGHT FULL OF WATER	680 LBS.
WEIGHT FULL OF PRODUCT	680 LBS.

GENERAL NOTES

1.) COVER ALL FLANGES, OPENINGS & MACHINED SURFACES PRIOR TO SHIPMENT UNLESS OTHERWISE NOTED.
2.) BOLT HOLES TO STRADDLE 0° & 180° UNLESS OTHERWISE NOTED.
3.)
4.) ASME CODE VESSELS TO BE IN ACCORDANCE WITH UG-80 & UG-81. TOLERANCES: +/- 1/8" FOR DIMENSIONS AND +/- 2 DEGREES FOR ORIENTATIONS.
5.) ASME MATERIALS TO CONFORM TO THE FOLLOWING: FLANGES - B16.5, FITTINGS - B16.9 & COUPLINGS - B16.11.
6.) PICKLE ALL EXTERIOR WELDS. PASSIVATE INTERIOR & EXTERIOR OF VESSEL.

△ REVISIONS

REV	D.BY	C.BY	DATE	DESCRIPTION
2				AS BUILT
1	RS	NP	8/18/25	CERTIFIED
0	RS	NP	6/24/25	APPROVAL

Savannah Tank & Equipment Corp.
1517 Telfair Road, Savannah, GA 31415
(912) 233-8902

DRAWN BY: RS
CHK'D BY: NP
APP. BY: NP
SCALE: 1 1/2" = 1'-0"

IRVING
GLUE CONTAINMENT DROPLET SEAL POT
△1 EQUIP. #010-1060-TAN-001-00
CUST. PO #20615990

DRAWING NO.: 076-25-1 SHT 1 OF 2 REV. SET 1

FC-14

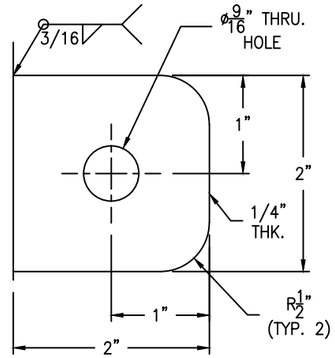

GROUND LUG DETAIL

(1 REQ'D) SCALE: 12" = 1'-0"

FC-14

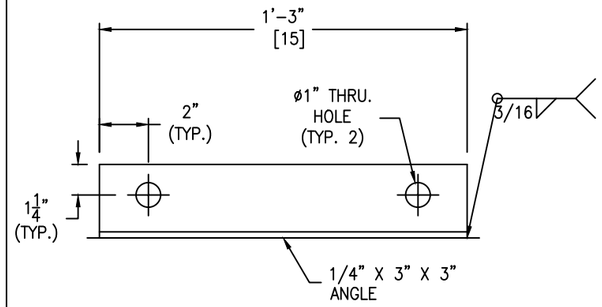

SUPPORT ANGLE

(2 REQ'D) SCALE: 3" = 1'-0"

FC-14

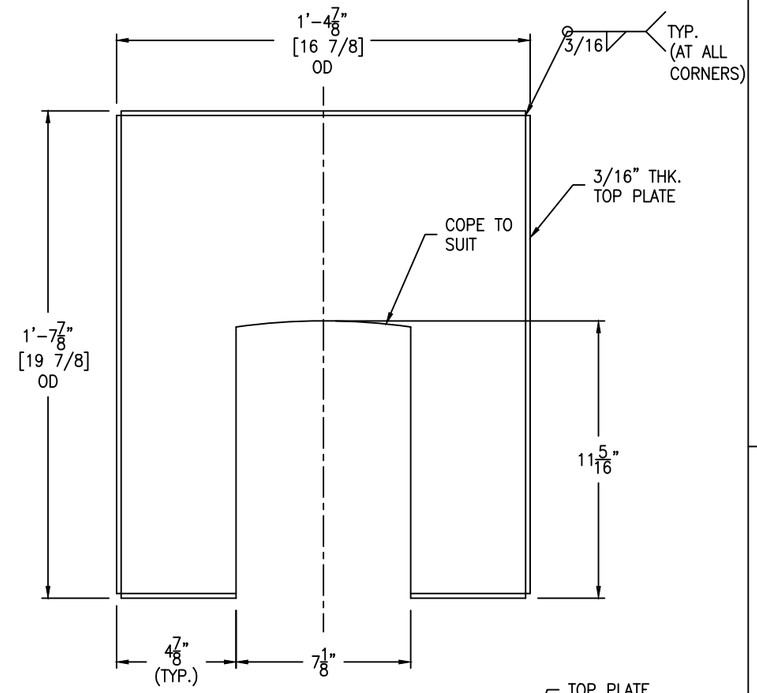

TOP LID DETAIL

SCALE: 3" = 1'-0"

FC-14

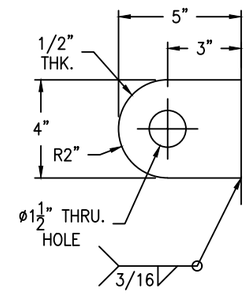

LIFT LUG DETAIL

(3 REQ'D) SCALE: 3" = 1'-0"

FC-14

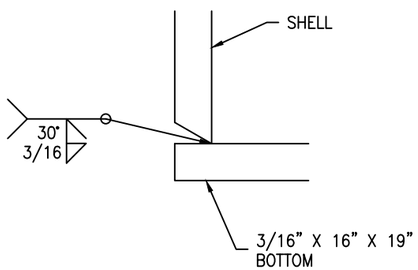

BOTTOM DETAIL

SCALE: 24" = 1'-0"

FC-14

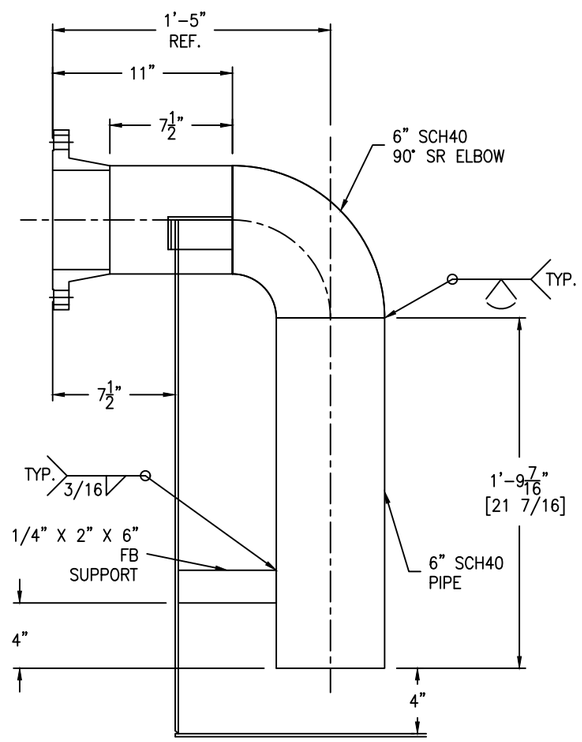

NOZZLE N2 DETAIL

SCALE: 2" = 1'-0"

FC-14

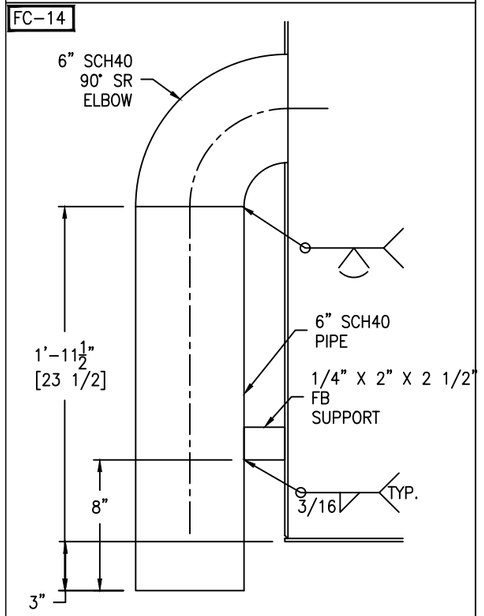

△1 NOZZLE N1 DETAIL

SCALE: 2" = 1'-0"

FC-14

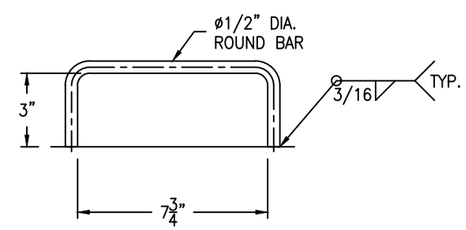

HANDLE DETAIL

SCALE: 3" = 1'-0"

ICP DRAWING NO. 010-1060-040 △1

Bolting for NOZZLE N3
(8) 5/8" - 11 NC x 3" HH BOLT
(8) 5/8" - 11 NC HH NUT
(1) 4" 150# RING GASKET X 1/8" THK.

REV	D.BY	C.BY	DATE	DESCRIPTION
2				AS BUILT
1	RS	–	8/18/25	CERTIFIED
0	RS	NP	6/24/25	APPROVAL

△1 REVISIONS

Savannah Tank & Equipment Corp.
1517 Telfair Road, Savannah, GA 31415
(912) 233-8902

DRAWN BY: RS
CHK'D BY: NP
APP. BY: NP △1
SCALE: 1 1/2" = 1'-0"

IRVING
GLUE CONTAINMENT DROPLET SEAL POT
EQUIP. #010-1060-TAN-001-00
CUST. PO #20615990

DRAWING NO.: 076-25-2 SHT 2 OF 2 REV. SET 1